© International Baccalaureate Organization 2021

All rights reserved. No part of this product may be reproduced in any form or by any electronic or mechanical means, including information storage and retrieval systems, without the prior written permission from the IB. Additionally, the license tied with this product prohibits use of any selected files or extracts from this product. Use by third parties, including but not limited to publishers, private teachers, tutoring or study services, preparatory schools, vendors operating curriculum mapping services or teacher resource digital platforms and app developers, whether fee-covered or not, is prohibited and is a criminal offense.

More information on how to request written permission in the form of a license can be obtained from https://ibo.org/become-an-ib-school/ib-publishing/licensing/applying-for-a-license/.

© Organisation du Baccalauréat International 2021

Tous droits réservés. Aucune partie de ce produit ne peut être reproduite sous quelque forme ni par quelque moyen que ce soit, électronique ou mécanique, y compris des systèmes de stockage et de récupération d'informations, sans l'autorisation écrite préalable de l'IB. De plus, la licence associée à ce produit interdit toute utilisation de tout fichier ou extrait sélectionné dans ce produit. L'utilisation par des tiers, y compris, sans toutefois s'y limiter, des éditeurs, des professeurs particuliers, des services de tutorat ou d'aide aux études, des établissements de préparation à l'enseignement supérieur, des fournisseurs de services de planification des programmes d'études, des gestionnaires de plateformes pédagogiques en ligne, et des développeurs d'applications, moyennant paiement ou non, est interdite et constitue une infraction pénale.

Pour plus d'informations sur la procédure à suivre pour obtenir une autorisation écrite sous la forme d'une licence, rendez-vous à l'adresse https://ibo.org/become-an-ib-school/ib-publishing/licensing/applying-for-a-license/.

© Organización del Bachillerato Internacional, 2021

Todos los derechos reservados. No se podrá reproducir ninguna parte de este producto de ninguna forma ni por ningún medio electrónico o mecánico, incluidos los sistemas de almacenamiento y recuperación de información, sin la previa autorización por escrito del IB. Además, la licencia vinculada a este producto prohíbe el uso de todo archivo o fragmento seleccionado de este producto. El uso por parte de terceros —lo que incluye, a título enunciativo, editoriales, profesores particulares, servicios de apoyo académico o ayuda para el estudio, colegios preparatorios, desarrolladores de aplicaciones y entidades que presten servicios de planificación curricular u ofrezcan recursos para docentes mediante plataformas digitales—, ya sea incluido en tasas o no, está prohibido y constituye un delito.

En este enlace encontrará más información sobre cómo solicitar una autorización por escrito en forma de licencia: https://ibo.org/become-an-ib-school/ib-publishing/licensing/applying-for-a-license/.

Diploma Programme
Programme du diplôme
Programa del Diploma

Mathematics: applications and interpretation
Higher level
Paper 3

Tuesday 9 November 2021 (morning)

1 hour

Instructions to candidates

- Do not open this examination paper until instructed to do so.
- A graphic display calculator is required for this paper.
- Answer all the questions in the answer booklet provided.
- Unless otherwise stated in the question, all numerical answers should be given exactly or correct to three significant figures.
- A clean copy of the **mathematics: applications and interpretation formula booklet** is required for this paper.
- The maximum mark for this examination paper is **[55 marks]**.

8821 – 7203
© International Baccalaureate Organization 2021

International Baccalaureate®
Baccalauréat International
Bachillerato Internacional

Answer **both** questions in the answer booklet provided. Please start each question on a new page. Full marks are not necessarily awarded for a correct answer with no working. Answers must be supported by working and/or explanations. Solutions found from a graphic display calculator should be supported by suitable working. For example, if graphs are used to find a solution, you should sketch these as part of your answer. Where an answer is incorrect, some marks may be given for a correct method, provided this is shown by written working. You are therefore advised to show all working.

1. [Maximum mark: 25]

This question explores how graph algorithms can be applied to a graph with an unknown edge weight.

Graph W is shown in the following diagram. The vertices of W represent tourist attractions in a city. The weight of each edge represents the travel time, to the nearest minute, between two attractions. The route between A and F is currently being resurfaced and this has led to a variable travel time. For this reason, AF has an unknown travel time x minutes, where $x \in \mathbb{Z}^+$.

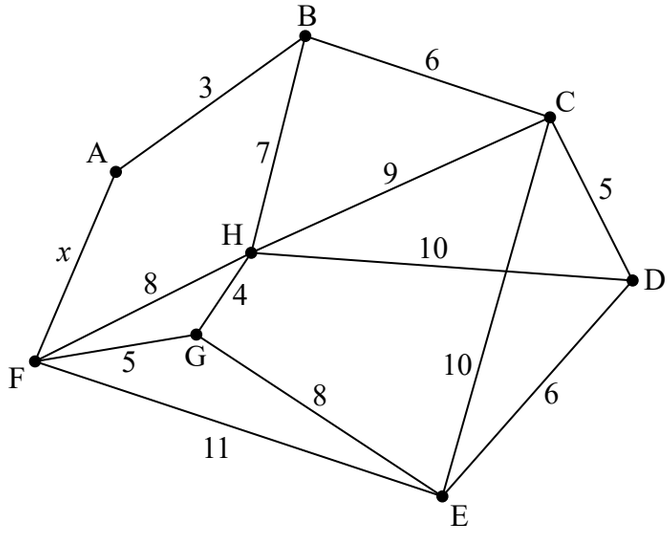

(a) Write down a Hamiltonian cycle in W. [1]

Daniel plans to visit all the attractions, starting and finishing at A. He wants to minimize his travel time.

To find a lower bound for Daniel's travel time, vertex A and its adjacent edges are first deleted.

(b) (i) Use Prim's algorithm, starting at vertex B, to find the weight of the minimum spanning tree of the remaining graph. You should indicate clearly the order in which the algorithm selects each edge. [5]

(ii) Hence, for the case where $x < 9$, find a lower bound for Daniel's travel time, in terms of x. [2]

(This question continues on the following page)

(Question 1 continued)

Daniel makes a table to show the minimum travel time between each pair of attractions.

	A	**B**	**C**	**D**	**E**	**F**	**G**	**H**
A		3	9	14	19 **or** $(11+x)$	18 **or** x	14 **or** $(5+x)$	10 **or** $(8+x)$
B			6	11	16 **or** $(14+x)$	15 **or** $(3+x)$	11 **or** $(8+x)$	7
C				5	10	17 **or** $(9+x)$	p	9
D					6	q **or** $(r+x)$	14	10
E						11	8	12
F							5	8
G								4
H								

(c) Write down the value of

(i) p; [1]

(ii) q; [1]

(iii) r. [1]

To find an upper bound for Daniel's travel time, the nearest neighbour algorithm is used, starting at vertex A.

(d) Consider the case where $x = 3$.

(i) Use the nearest neighbour algorithm to find two possible cycles. [3]

(ii) Find the best upper bound for Daniel's travel time. [2]

(e) Consider the case where $x > 3$.

(i) Find the least value of x for which the edge AF will definitely not be used by Daniel. [2]

(ii) Hence state the value of the upper bound for Daniel's travel time for the value of x found in part (e)(i). [2]

The tourist office in the city has received complaints about the lack of cleanliness of some routes between the attractions. Corinne, the office manager, decides to inspect all the routes between all the attractions, starting and finishing at H. The sum of the weights of all the edges in graph W is $(92+x)$.

Corinne inspects all the routes as quickly as possible and takes 2 hours.

(f) Find the value of x during Corinne's inspection. [5]

2. [Maximum mark: 30]

This question explores models for the height of water in a cylindrical container as water drains out.

The diagram shows a cylindrical water container of height 3.2 metres and base radius 1 metre. At the base of the container is a small circular valve, which enables water to drain out.

diagram not to scale

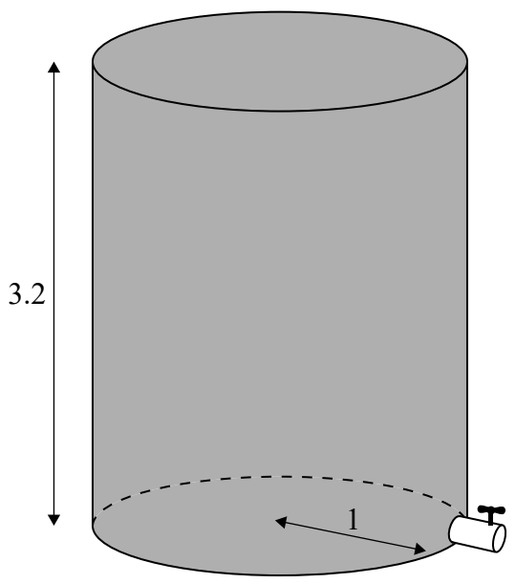

Eva closes the valve and fills the container with water.

At time $t = 0$, Eva opens the valve. She records the height, h metres, of water remaining in the container every 5 minutes.

Time, t (minutes)	Height, h (metres)
0	3.2
5	2.4
10	1.6
15	1.1
20	0.5

Eva first tries to model the height using a linear function, $h(t) = at + b$, where a, $b \in \mathbb{R}$.

(a) (i) Find the equation of the regression line of h on t. [2]

(ii) Interpret the meaning of parameter a in the context of the model. [1]

(This question continues on the following page)

(Question 2 continued)

Eva uses the equation of the regression line of h on t, to predict the time it will take for all the water to drain out of the container.

(iii) Suggest why Eva's use of the linear regression equation in this way could be unreliable. [1]

Eva thinks she can improve her model by using a quadratic function, $h(t) = pt^2 + qt + r$, where p, q, $r \in \mathbb{R}$.

(b) (i) Find the equation of the least squares quadratic regression curve. [1]

Eva uses this equation to predict the time it will take for all the water to drain out of the container and obtains an answer of k minutes.

(ii) Find the value of k. [2]

(iii) Hence, write down a suitable domain for Eva's function $h(t) = pt^2 + qt + r$. [1]

Let V be the volume, in cubic metres, of water in the container at time t minutes.
Let R be the radius, in metres, of the circular valve.

Eva does some research and discovers a formula for the rate of change of V.

$$\frac{\mathrm{d}V}{\mathrm{d}t} = -\pi R^2 \sqrt{70\,560h}$$

(c) Show that $\frac{\mathrm{d}h}{\mathrm{d}t} = -R^2\sqrt{70\,560h}$. [3]

(d) By solving the differential equation $\frac{\mathrm{d}h}{\mathrm{d}t} = -R^2\sqrt{70\,560h}$, show that the general solution is given by $h = 17\,640(c - R^2t)^2$, where $c \in \mathbb{R}$. [5]

Eva measures the radius of the valve to be 0.023 metres. Let T be the time, in minutes, it takes for all the water to drain out of the container.

(e) Use the general solution from part (d) and the initial condition $h(0) = 3.2$ to predict the value of T. [4]

Eva wants to use the container as a timer. She adjusts the initial height of water in the container so that all the water will drain out of the container in 15 minutes.

(f) Find this new height. [3]

(This question continues on the following page)

(Question 2 continued)

Eva has another water container that is identical to the first one. She places one water container above the other one, so that all the water from the highest container will drain into the lowest container. Eva completely fills the highest container, but only fills the lowest container to a height of 1 metre, as shown in the diagram.

diagram not to scale

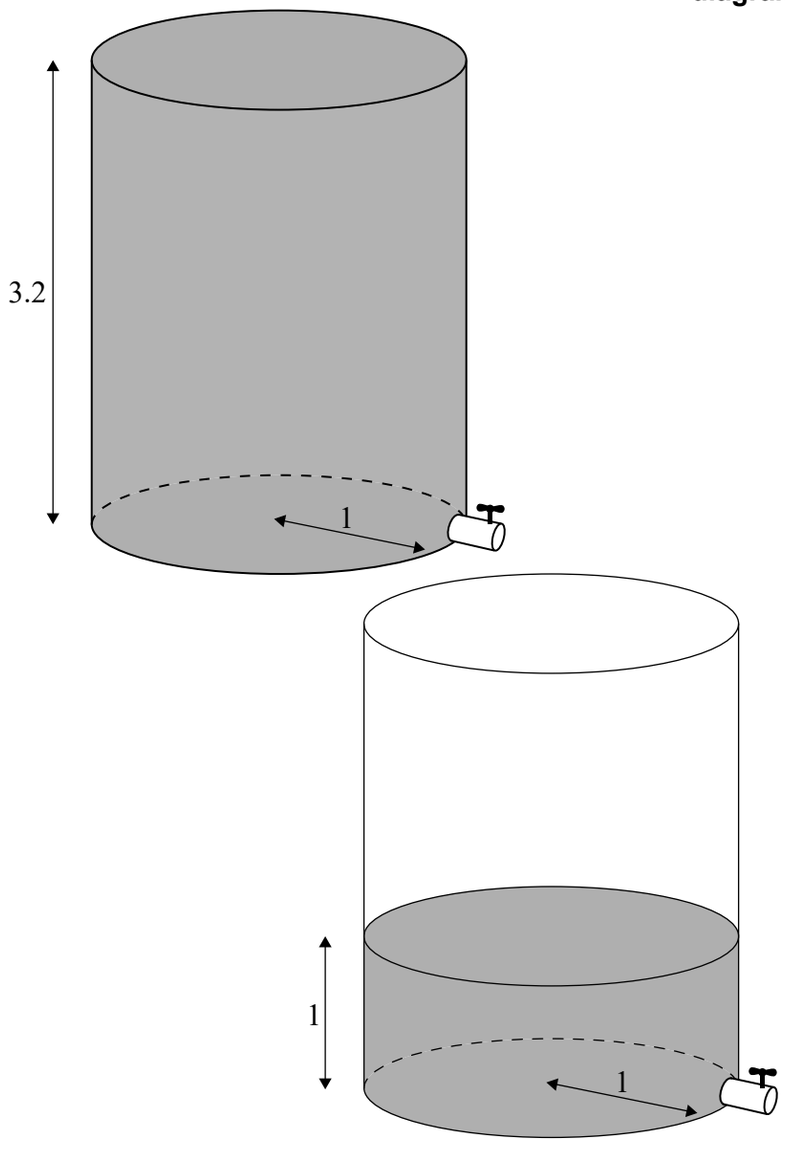

At time $t = 0$ Eva opens both valves. Let H be the height of water, in metres, in the lowest container at time t.

(g) (i) Show that $\frac{\mathrm{d}H}{\mathrm{d}t} \approx 0.2514 - 0.009873t - 0.1405\sqrt{H}$, where $0 \leq t \leq T$. [4]

(ii) Use Euler's method with a step length of 0.5 minutes to estimate the maximum value of H. [3]

References:

© International Baccalaureate Organization 2021